Pt 3

74D462093

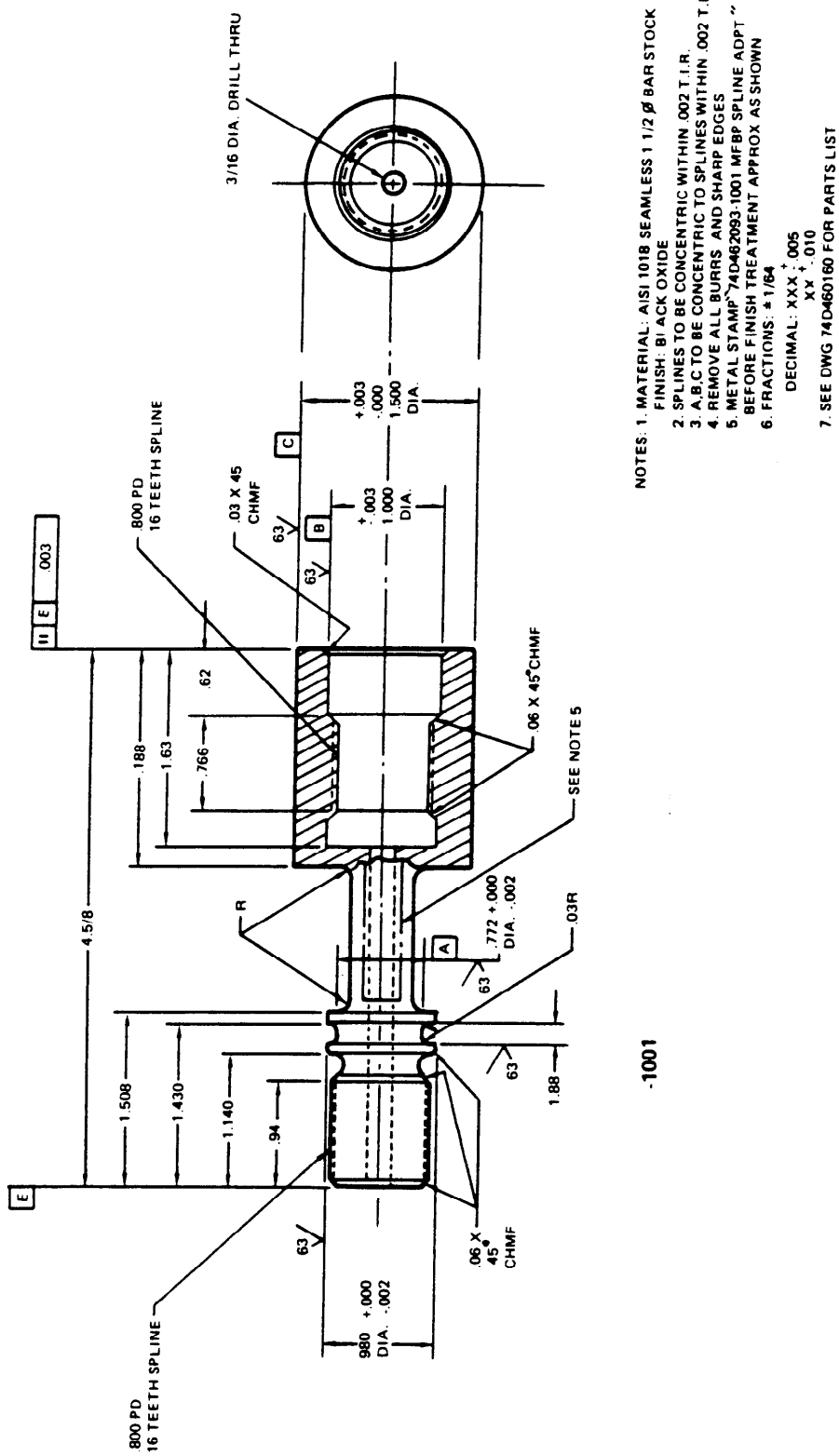

NOTES: 1. MATERIAL: AISI 1018 SEAMLESS 1 1/2 ø BAR STOCK
FINISH: BLACK OXIDE
2. SPLINES TO BE CONCENTRIC WITHIN .002 T.I.R.
3. A,B,C TO BE CONCENTRIC TO SPLINES WITHIN .002 T.I.R.
4. REMOVE ALL BURRS AND SHARP EDGES
5. METAL STAMP "74D462093-1001 MFBP SPLINE ADPT"
BEFORE FINISH TREATMENT APPROX AS SHOWN
6. FRACTIONS: ±1/64
DECIMAL: XXX ±.005
XX ±.010
7. SEE DWG 74D460160 FOR PARTS LIST

-1001

M528775-210

Motive Boost Pump, Spline Adapter

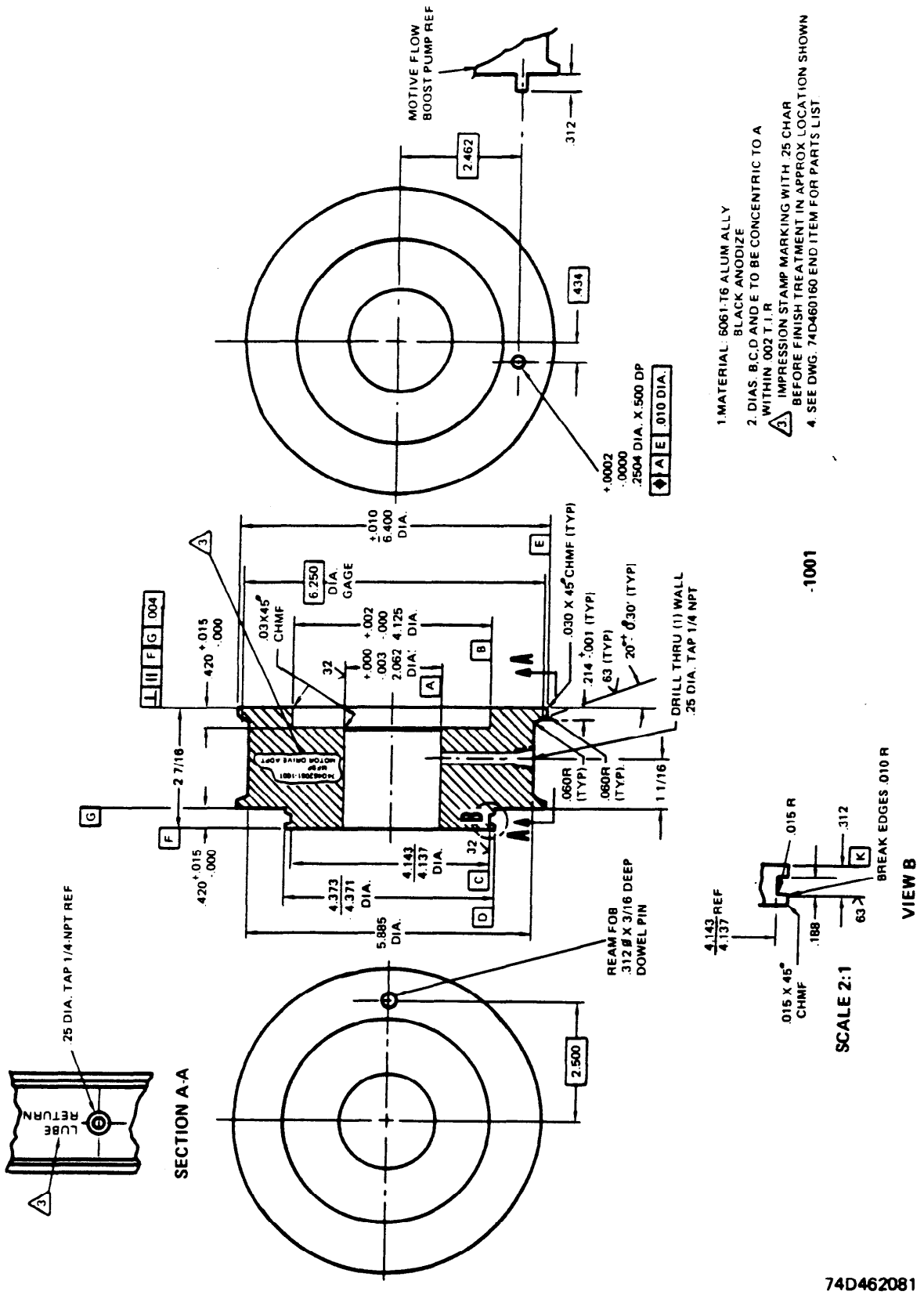

M28775-243

Motive Boost Pump, Motor Drive Adapter

APPENDIX 1

SOFTWARE DATA

SYSTEM 10 DATA SHEET

Section 1 -- Channel Configuration

Channel (CHN)	Comments	Type (TYP)	Locate (LCT)	Filter (FIL)	EMM	BEE
1	.....	72	1011	9	76.40	-86
2	.....	72	1012	9	302.0	0
3	.....	72	1021	9	199.4	19
4	.....	72	1022	9	453.0	19
5	.....	72	1031	9	199.7	19
6	.....	72	1032	9	3001.8	-492
7	.....	72	1041	9	150.1	-21
8	.....	72	1042	9	452.1	-2084
9	.....	72	1051	5	150.9	-10
10	.....	71	1052	5	5000	0
11	.....	71	1061	1	-1499	-18
12	.....	55	1131	1	5000	0
13	.....	55	1072	1	-.252	375
14	.....	41	1221	9	500.0	0
15	.....	43	1181	5	2000.0	0
16	.....	42	1191	9	1000.0	0
17	.....	43	1192	9	2000.0	0
18	.....	43	1201	9	2000.0	0
19	.....	43	1161	5	2000.0	0
20	.....	43	1211	9	2000.0	0
21	.....	43	1212	5	2000.0	0
22	.....	41	1231	1	2.4	0
23	.....	67	1092	5	5.00	0
24	.....	67	1093	9	5000	0
25	.....	67	1094	9	5000	0
26	.....	67	1095	1	5000	0
27	.....	67	1096	1	5000	0
28	.....	67	1097	1	5000	0
29	.....	67	1098	1	5000	0
30	.....	A3	1101	4	3060	32
31	.....	A3	1102	4	3060	32
32	.....	A3	1103	4	3060	32
33	.....	A3	1104	4	3060	32
34	.....	A3	1111	4	3060	32
35	.....	A3	1112	4	3060	30
36	.....	A3	1113	4	3060	-387
37	.....	A3	1114	4	3060	32
38	.....	A3	1121	4	3060	32
39	.....	A3	1123	4	3060	31
40	.....	A4	1122	4	3060	32
41	.....	A8	1131	4	3060.0	320
42	.....	45	1241	5	8000	0
43	.....	F1	N/A	N/A	1.0	0
44	.....	F1	N/A	N/A	1.0	.0
45	.....	F1	N/A	N/A	1.0	.0
46	.....	F1	N/A	N/A	1.0	.0
47	.....	F0	N/A	N/A	1	0
48	.....	F0	N/A	N/A	1	0
49	.....	F0	N/A	N/A	1	0
50	.....	FC	N/A	N/A	381	.00

SYSTEM 10 DATA SHEET

Section 1 -- Channel Configuration

Channel (CHN)	Comments	Type (TYP)	Locate (LCT)	Filter (FIL)	EMM	BEE
51	.....	EA	8031	N/A	261180	-6394
52	.....	D5	N/A	N/A	5000	0
53	.....	F6	N/A	N/A	5000	0
54	.....	F6	N/A	N/A	5000	0
55	.....	D0	N/A	N/A	5000	0
56	.....	F6	N/A	N/A	385	0
57	.....	D5	N/A	N/A	5000	0
58	.....	43	1171	5	11.00	0
59	.....	D5	N/A	N/A	9.8	-49
60	.....	EA	1011	N/A	170.00	0
61	.....	F6	N/A	N/A	5.846	0
62	.....	F2	N/A	N/A	1	0
63	.....	F2	N/A	N/A	1	0
64	.....	B4	BIN3	N/A	5000	0
65	.....	B4	BIN4	N/A	5000	0
66	.....	E1	1011	N/A	3898	0
67	.....	F0	N/A	N/A	1	0
68	.....	FC	N/A	N/A	371	.00
69	.....	D5	N/A	N/A	5000	0
70	.....	EA	1011	N/A	170.00	0
71	.....	F6	N/A	N/A	1.4911	0
72	.....	F2	N/A	N/A	1	0
73	.....	F2	N/A	N/A	1	0
74	.....	B4	BIN5	N/A	5000	0
75	.....	B4	BIN6	N/A	5000	0
76	.....	D0	N/A	N/A	5000	0
77	.....	F0	N/A	N/A	1	0
78	.....	FC	N/A	N/A	371	.00
79	.....	D5	N/A	N/A	5000	0
80	.....	EA	1011	N/A	170.00	0
81	.....	D0	N/A	N/A	5000	0
82	.....	D0	N/A	N/A	5000	0
83	.....	F1	N/A	N/A	1.0	0
84	.....	F2	N/A	N/A	133.14	0
85	.....	D0	N/A	N/A	5000	0
86	.....	D2	N/A	N/A	5000	0
87	.....	D5	N/A	N/A	5000	0
88	.....	D5	N/A	N/A	5000	0
89	.....	D5	N/A	N/A	5000	0
90	.....	EA	1011	N/A	17.000	0
91	.....	43	1151	9	13.0	0
92	.....	D5	N/A	N/A	5000	0
93	.....	D5	N/A	N/A	5000	0
94	.....	D5	N/A	N/A	5000	0
95	.....	D5	N/A	N/A	5000	0
96	.....	D5	N/A	N/A	5000	0
97	.....	D5	N/A	N/A	5000	0
98	.....	D5	N/A	N/A	5000	0
99	.....	F6	N/A	N/A	16.03	.0
100	.....	67	1092	-1	5000	0

SYSTEM 10 DATA SHEET

Section 1 -- Channel Configuration

Channel (CHN)	Comments	Type (TYP)	Locate (LCT)	Filter (FIL)	EMM	BEE
101	.....	D2	N/A	N/A	5000	0
102	.....	D5	N/A	N/A	5000	0
103	.....	D5	N/A	N/A	5000	0
104	.....	D5	N/A	N/A	5000	0
105	.....	D5	N/A	N/A	5000	0
106	.....	D5	N/A	N/A	5000	0
107	.....	D5	N/A	N/A	5000	0
108	.....	D5	N/A	N/A	5000	0
109	.....	D5	N/A	N/A	5000	0
110	.....	EA	1011	N/A	170.00	0
111	.....	F6	N/A	N/A	1.516	0
112	.....	F2	N/A	N/A	1	0
113	.....	F2	N/A	N/A	1	0
114	.....	B4	BIN7	N/A	5000	0
115	.....	B4	BIN8	N/A	5000	0
116	.....	D0	N/A	N/A	5000	0
117	.....	F0	N/A	N/A	1	0
118	.....	D5	N/A	N/A	5000	0
119	.....	D5	N/A	N/A	5000	0
120	.....	EA	1011	N/A	170.00	0
121	.....	F6	N/A	N/A	385	0
122	.....	F0	N/A	N/A	1.0	.0
123	.....	F0	N/A	N/A	1.0	.0
124	.....	D5	N/A	N/A	5000	0
125	.....	D2	N/A	N/A	5000	0
126	.....	D5	N/A	N/A	5000	0
127	.....	D5	N/A	N/A	5000	0
128	.....	D5	N/A	N/A	5000	0
129	.....	D5	N/A	N/A	5000	0
130	.....	EA	1011	N/A	170.00	0
131	.....	D5	N/A	N/A	5000	0
132	.....	D5	N/A	N/A	5000	0
133	.....	D5	N/A	N/A	5000	0
134	.....	D5	N/A	N/A	5000	0
135	.....	D5	N/A	N/A	5000	0
136	.....	D5	N/A	N/A	5000	0
137	.....	D5	N/A	N/A	5000	0
138	.....	D5	N/A	N/A	5000	0
139	.....	D5	N/A	N/A	5000	0
140	.....	EA	1011	N/A	17.000	0
141	.....	D5	N/A	N/A	5000	0
142	.....	D0	N/A	N/A	5000	0
143	.....	D5	N/A	N/A	5000	0
144	.....	D5	N/A	N/A	5000	0
145	.....	D5	N/A	N/A	5000	0
146	.....	D5	N/A	N/A	5000	0
147	.....	D5	N/A	N/A	5000	0
148	.....	D5	N/A	N/A	5000	0
149	.....	D5	N/A	N/A	5000	0
150	.....	EA	1011	0	261180	-6394

SYSTEM 10 DATA SHEET

Section 1 -- Channel Configuration

Channel (CHN)	Comments	Type (TYP)	Locate (LCT)	Filter (FIL)	EMM	BEE
151	.....	F6	N/A	N/A	1.00	.00
152	.....	F0	N/A	N/A	.50	.00
153	.....	F0	N/A	N/A	.50	.00
154	.....	F0	N/A	N/A	.50	.00
155	.....	D5	N/A	N/A	5000	0
156	.....	F6	N/A	N/A	1.00	.00
157	.....	F6	N/A	N/A	1.00	.00
158	.....	F6	N/A	N/A	1.00	.00
159	.....	F0	N/A	N/A	.50	.00
160	.....	F0	N/A	N/A	.5	.0
161	.....	D0	N/A	N/A	5000	0
162	.....	72	1071	-1	5000	-5079
163	.....	D0	N/A	N/A	5000	0
164	.....	D0	N/A	N/A	5000	0
165	.....	D0	N/A	N/A	5000	0
166	.....	D0	N/A	N/A	5000	0
167	.....	D0	N/A	N/A	5000	0
168	.....	D0	N/A	N/A	5000	0
169	.....	D5	N/A	N/A	5000	0
170	.....	D5	N/A	N/A	5000	0
171	.....	D5	N/A	N/A	5000	0
172	.....	D5	N/A	N/A	5000	0
173	.....	D5	N/A	N/A	5000	0
174	.....	D5	N/A	N/A	5000	0
175	.....	D5	N/A	N/A	5000	0
176	.....	D5	N/A	N/A	5000	0
177	.....	D5	N/A	N/A	5000	0
178	.....	D5	N/A	N/A	5000	0
179	.....	D5	N/A	N/A	5000	0
180	.....	D5	N/A	N/A	5000	0
181	.....	D5	N/A	N/A	5000	0
182	.....	D5	N/A	N/A	5000	0
183	.....	D5	N/A	N/A	5000	0
184	.....	D5	N/A	N/A	5000	0
185	.....	D5	N/A	N/A	5000	0
186	.....	D5	N/A	N/A	5000	0
187	.....	D5	N/A	N/A	5000	0
188	.....	D5	N/A	N/A	5000	0
189	.....	D5	N/A	N/A	5000	0
190	.....	D5	N/A	N/A	5000	0
191	.....	D5	N/A	N/A	5000	0
192	.....	D5	N/A	N/A	5000	0
193	.....	D5	N/A	N/A	5000	0
194	.....	D5	N/A	N/A	5000	0
195	.....	D5	N/A	N/A	5000	0
196	.....	D5	N/A	N/A	5000	0
197	.....	D5	N/A	N/A	5000	0
198	.....	D5	N/A	N/A	5000	0
199	.....	D5	N/A	N/A	5000	0
200	.....	D2	N/A	N/A	5000	0

SYSTEM 10 DATA SHEET

Section 1 -- Channel Configuration

Channel (CHN)	Comments	Type (TYP)	Locate (LCT)	Filter (FIL)	EMM	BEE
201	.....	D0	N/A	N/A	5000	0
202	.....	D0	N/A	N/A	5000	0
203	.....	55	1011	-1	5000	0
204	.....	D5	N/A	N/A	5000	0
205	.....	D5	N/A	N/A	5000	0
206	.....	D5	N/A	N/A	5000	0
207	.....	D5	N/A	N/A	5000	0
208	.....	D5	N/A	N/A	5000	0
209	.....	D5	N/A	N/A	5000	0
210	.....	D5	N/A	N/A	5000	0
211	.....	D5	N/A	N/A	5000	0
212	.....	D5	N/A	N/A	5000	0
213	.....	D5	N/A	N/A	5000	0
214	.....	D5	N/A	N/A	5000	0
215	.....	D5	N/A	N/A	5000	0
216	.....	D5	N/A	N/A	5000	0
217	.....	D5	N/A	N/A	5000	0
218	.....	D5	N/A	N/A	5000	0
219	.....	D5	N/A	N/A	5000	0
220	.....	67	1092	-1	5000	0
221	.....	D5	N/A	N/A	5000	0
222	.....	D5	N/A	N/A	5000	0
223	.....	D5	N/A	N/A	5000	0
224	.....	D5	N/A	N/A	5000	0
225	.....	D5	N/A	N/A	5000	0
226	.....	D5	N/A	N/A	5000	0
227	.....	D5	N/A	N/A	5000	0
228	.....	D5	N/A	N/A	5000	0
229	.....	D5	N/A	N/A	5000	0
230	.....	D5	N/A	N/A	5000	0
231	.....	D5	N/A	N/A	5000	0
232	.....	D5	N/A	N/A	5000	0
233	.....	D5	N/A	N/A	5000	0
234	.....	D5	N/A	N/A	5000	0
235	.....	D5	N/A	N/A	5000	0
236	.....	D5	N/A	N/A	5000	0
237	.....	D5	N/A	N/A	5000	0
238	.....	D5	N/A	N/A	5000	0
239	.....	D5	N/A	N/A	5000	0
240	.....	D5	N/A	N/A	5000	0
241	.....	D5	N/A	N/A	5000	0
242	.....	D5	N/A	N/A	5000	0
243	.....	D5	N/A	N/A	5000	0
244	.....	D5	N/A	N/A	5000	0
245	.....	D5	N/A	N/A	5000	0
246	.....	D5	N/A	N/A	5000	0
247	.....	D5	N/A	N/A	5000	0
248	.....	D5	N/A	N/A	5000	0
249	.....	D5	N/A	N/A	5000	0
250	.....	55	1081	-1	5000	0

SYSTEM 10 DATA SHEET

Section 2 -- Limits/Logics

Channel (CHN)	Low Limit (LOL)	High Limit (HIL)	Less Than Logic (LLT)	Between Logic (LBT)	Greater Than Logic (LGT)
1	-30.00	47.50	N/A	N/A	N/A
2	-300.0	190.0	N/A	N/A	N/A
3	-300.0	95.0	N/A	N/A	N/A
4	-300.0	5.0	N/A	N/A	10
5	-300.0	190.0	N/A	N/A	N/A
6	-300.0	190.0	N/A	N/A	N/A
7	-300.0	95.0	N/A	N/A	N/A
8	-300.0	285.0	N/A	N/A	N/A
9	-300.0	95.0	N/A	N/A	N/A
10	-3000	3000	N/A	N/A	N/A
11	200	1900	N/A	N/A	N/A
12	1	3000	N/A	N/A	N/A
13	.002	.700	N/A	N/A	N/A
14	-300.0	CHN66	N/A	32	48
15	-300.0	CHN76	N/A	64	80
16	-300.0	324.9	N/A	N/A	N/A
17	-300.0	361.0	N/A	N/A	N/A
18	-300.0	2.0	N/A	96	10
19	-300.0	361.0	N/A	N/A	N/A
20	-300.0	324.9	N/A	N/A	N/A
21	-300.0	541.5	N/A	N/A	N/A
22	-300.0	300.0	N/A	N/A	N/A
23	-30.00	30.00	N/A	N/A	N/A
24	-5	4000	N/A	N/A	5
25	-500	4000	N/A	N/A	6
26	-5	4000	N/A	N/A	9
27	-5	4000	N/A	N/A	0
28	-5	4000	N/A	N/A	8
29	-5	4000	N/A	N/A	7
30	-3000	1000	N/A	N/A	N/A
31	-3000	1000	N/A	N/A	N/A
32	-3000	1000	N/A	N/A	N/A
33	-3000	1000	N/A	N/A	N/A
34	-3000	1000	N/A	N/A	N/A
35	-3000	1000	N/A	N/A	N/A
36	-3000	1000	N/A	N/A	N/A
37	-3000	1000	N/A	N/A	N/A
38	-3000	1000	N/A	N/A	N/A
39	-3000	1000	N/A	N/A	N/A
40	-3000	3000	N/A	N/A	N/A
41	-300.0	300.0	N/A	N/A	N/A
42	-3000	7600	N/A	N/A	N/A
43	-3000	1900	N/A	N/A	N/A
44	-300.0	95.0	N/A	N/A	N/A
45	-300.0	195.0	N/A	N/A	N/A
46	-300.0	300.0	N/A	N/A	N/A
47	-3000	3249	N/A	N/A	N/A
48	-3000	3000	N/A	N/A	N/A
49	-3000	3000	N/A	N/A	N/A
50	-30.00	320.00	N/A	N/A	N/A

SYSTEM 10 DATA SHEET

Section 2 -- Limits/Logics

Channel (CHN)	Low Limit (LOL)	High Limit (HIL)	Less Than Logic (LLT)	Between Logic (LBT)	Greater Than Logic (LGT)
51	-30000	42560	N/A	N/A	N/A
52	-3000	3000	N/A	N/A	N/A
53	-3000	3000	N/A	N/A	N/A
54	-3000	3000	N/A	N/A	N/A
55	-3000	3000	N/A	N/A	N/A
56	-3000	3000	N/A	N/A	N/A
57	-3000	3000	N/A	N/A	N/A
58	-30.00	30.00	N/A	N/A	N/A
59	-300.0	300.0	N/A	N/A	N/A
60	-30.00	30.00	N/A	N/A	N/A
61	-3000	3000	N/A	N/A	N/A
62	-3000	3000	N/A	N/A	N/A
63	-3000	3000	N/A	N/A	N/A
64	-3000	3000	N/A	N/A	N/A
65	-3000	3000	N/A	N/A	N/A
66	-3000	5000	N/A	N/A	N/A
67	-3000	3000	N/A	N/A	N/A
68	-30.00	30.00	N/A	N/A	N/A
69	-3000	3000	N/A	N/A	N/A
70	-30.00	30.00	N/A	N/A	N/A
71	-3000	3000	N/A	N/A	N/A
72	-3000	3000	N/A	N/A	N/A
73	-3000	3000	N/A	N/A	N/A
74	-3000	3000	N/A	N/A	N/A
75	-3000	3000	N/A	N/A	N/A
76	-3000	3000	N/A	N/A	N/A
77	-3000	3000	N/A	N/A	N/A
78	-30.00	30.00	N/A	N/A	N/A
79	-3000	3000	N/A	N/A	N/A
80	-30.00	30.00	N/A	N/A	N/A
81	-3000	3000	N/A	N/A	N/A
82	-3000	3000	N/A	N/A	N/A
83	-3000	3000	N/A	N/A	N/A
84	-3000	3000	N/A	N/A	N/A
85	-3000	3000	N/A	N/A	N/A
86	-3000	5	N/A	N/A	86
87	-3000	3000	N/A	N/A	N/A
88	-3000	3000	N/A	N/A	N/A
89	-3000	3000	N/A	N/A	N/A
90	-3.000	3.000	N/A	N/A	N/A
91	-300.0	300.0	N/A	N/A	N/A
92	-3000	3000	N/A	N/A	N/A
93	-3000	3000	N/A	N/A	N/A
94	-3000	3000	N/A	N/A	N/A
95	-3000	3000	N/A	N/A	N/A
96	-3000	3000	N/A	N/A	N/A
97	-3000	3000	N/A	N/A	N/A
98	-3000	3000	N/A	N/A	N/A
99	-300.0	950.0	N/A	N/A	N/A
100	-3000	3000	N/A	N/A	30

SYSTEM 10 DATA SHEET

Section 2 -- Limits/Logics

Channel (CHN)	Low Limit (LOL)	High Limit (HIL)	Less Than Logic (LLT)	Between Logic (LBT)	Greater Than Logic (LGT)
101	-3000	3000	N/A	N/A	N/A
102	-3000	3000	N/A	N/A	N/A
103	-3000	3000	N/A	N/A	N/A
104	-3000	3000	N/A	N/A	N/A
105	-3000	3000	N/A	N/A	N/A
106	-3000	3000	N/A	N/A	N/A
107	-3000	3000	N/A	N/A	N/A
108	-3000	3000	N/A	N/A	N/A
109	-3000	3000	N/A	N/A	N/A
110	-30.00	30.00	N/A	N/A	N/A
111	-3000	3000	N/A	N/A	N/A
112	-3000	3000	N/A	N/A	N/A
113	-3000	3000	N/A	N/A	N/A
114	-3000	3000	N/A	N/A	N/A
115	-3000	3000	N/A	N/A	N/A
116	-3000	3000	N/A	N/A	N/A
117	-3000	3000	N/A	N/A	N/A
118	-3000	3000	N/A	N/A	N/A
119	-3000	3000	N/A	N/A	N/A
120	-30.00	30.00	N/A	N/A	N/A
121	-3000	3000	N/A	N/A	N/A
122	-300.0	300.0	N/A	N/A	N/A
123	-300.0	300.0	N/A	N/A	N/A
124	-3000	3000	N/A	N/A	N/A
125	-3000	20	N/A	N/A	11
126	-3000	3000	N/A	N/A	N/A
127	-3000	3000	N/A	N/A	N/A
128	-3000	3000	N/A	N/A	N/A
129	-3000	3000	N/A	N/A	N/A
130	-30.00	30.00	N/A	N/A	N/A
131	-3000	3000	N/A	N/A	N/A
132	-3000	3000	N/A	N/A	N/A
133	-3000	3000	N/A	N/A	N/A
134	-3000	3000	N/A	N/A	N/A
135	-3000	3000	N/A	N/A	N/A
136	-3000	3000	N/A	N/A	N/A
137	-3000	3000	N/A	N/A	N/A
138	-3000	3000	N/A	N/A	N/A
139	-3000	3000	N/A	N/A	N/A
140	-3.000	3.000	N/A	N/A	N/A
141	-3000	3000	N/A	N/A	N/A
142	-3000	3000	N/A	N/A	N/A
143	-3000	3000	N/A	N/A	N/A
144	-3000	3000	N/A	N/A	N/A
145	-3000	3000	N/A	N/A	N/A
146	-3000	3000	N/A	N/A	N/A
147	-3000	3000	N/A	N/A	N/A
148	-3000	3000	N/A	N/A	N/A
149	-3000	3000	N/A	N/A	N/A
150	-30000	30000	N/A	N/A	N/A

SYSTEM 10 DATA SHEET

Section 2 -- Limits/Logics

Channel (CHN)	Low Limit (LOL)	High Limit (HIL)	Less Than Logic (LLT)	Between Logic (LBT)	Greater Than Logic (LGT)
151	-30.00	30.00	N/A	N/A	N/A
152	-30.00	30.00	N/A	N/A	N/A
153	-30.00	30.00	N/A	N/A	N/A
154	-30.00	30.00	N/A	N/A	N/A
155	-3000	3000	N/A	N/A	N/A
156	-30.00	30.00	N/A	N/A	N/A
157	-30.00	30.00	N/A	N/A	N/A
158	-30.00	30.00	N/A	N/A	N/A
159	-30.00	30.00	N/A	N/A	N/A
160	-300.0	300.0	N/A	N/A	N/A
161	-3000	3000	N/A	N/A	N/A
162	-3000	3000	N/A	N/A	N/A
163	-3000	3000	N/A	N/A	N/A
164	-3000	3000	N/A	N/A	N/A
165	-3000	3000	N/A	N/A	N/A
166	-3000	3000	N/A	N/A	N/A
167	-3000	3000	N/A	N/A	N/A
168	-3000	3000	N/A	N/A	N/A
169	-3000	3000	N/A	N/A	N/A
170	-3000	3000	N/A	N/A	N/A
171	-3000	3000	N/A	N/A	N/A
172	-3000	3000	N/A	N/A	N/A
173	-3000	3000	N/A	N/A	N/A
174	-3000	3000	N/A	N/A	N/A
175	-3000	3000	N/A	N/A	N/A
176	-3000	3000	N/A	N/A	N/A
177	-3000	3000	N/A	N/A	N/A
178	-3000	3000	N/A	N/A	N/A
179	-3000	3000	N/A	N/A	N/A
180	-3000	3000	N/A	N/A	N/A
181	-3000	3000	N/A	N/A	N/A
182	-3000	3000	N/A	N/A	N/A
183	-3000	3000	N/A	N/A	N/A
184	-3000	3000	N/A	N/A	N/A
185	-3000	3000	N/A	N/A	N/A
186	-3000	3000	N/A	N/A	N/A
187	-3000	3000	N/A	N/A	N/A
188	-3000	3000	N/A	N/A	N/A
189	-3000	3000	N/A	N/A	N/A
190	-3000	3000	N/A	N/A	N/A
191	-3000	3000	N/A	N/A	N/A
192	3000	3000	N/A	N/A	N/A
193	-3000	3000	N/A	N/A	N/A
194	-3000	3000	N/A	N/A	N/A
195	-3000	3000	N/A	N/A	N/A
196	-3000	3000	N/A	N/A	N/A
197	-3000	3000	N/A	N/A	N/A
198	-3000	3000	N/A	N/A	N/A
199	-3000	3000	N/A	N/A	N/A
200	-3000	5	N/A	N/A	1

SYSTEM 10 DATA SHEET

Section 2 -- Limits/Logics

Channel (CHN)	Low Limit (LOL)	High Limit (HIL)	Less Than Logic (LLT)	Between Logic (LBT)	Greater Than Logic (LGT)
201	-3000	3000	N/A	N/A	N/A
202	-3000	4	N/A	N/A	N/A
203	-300	5	N/A	N/A	N/A
204	-3000	3000	N/A	N/A	N/A
205	-3000	3000	N/A	N/A	N/A
206	-3000	3000	N/A	N/A	N/A
207	-3000	3000	N/A	N/A	N/A
208	-3000	3000	N/A	N/A	N/A
209	-3000	3000	N/A	N/A	N/A
210	-3000	3000	N/A	N/A	N/A
211	-3000	3000	N/A	N/A	N/A
212	-3000	3000	N/A	N/A	N/A
213	-3000	3000	N/A	N/A	N/A
214	-3000	3000	N/A	N/A	N/A
215	-3000	3000	N/A	N/A	N/A
216	-3000	3000	N/A	N/A	N/A
217	-3000	3000	N/A	N/A	N/A
218	-3000	3000	N/A	N/A	N/A
219	-3000	3000	N/A	N/A	N/A
220	-3000	3000	N/A	N/A	N/A
221	-3000	3000	N/A	N/A	N/A
222	-3000	3000	N/A	N/A	N/A
223	-3000	3000	N/A	N/A	N/A
224	-3000	3000	N/A	N/A	N/A
225	-3000	3000	N/A	N/A	N/A
226	-3000	3000	N/A	N/A	N/A
227	-3000	3000	N/A	N/A	N/A
228	-3000	3000	N/A	N/A	N/A
229	-3000	3000	N/A	N/A	N/A
230	-3000	3000	N/A	N/A	N/A
231	-3000	3000	N/A	N/A	N/A
232	-3000	3000	N/A	N/A	N/A
233	-3000	3000	N/A	N/A	N/A
234	-3000	3000	N/A	N/A	N/A
235	-3000	3000	N/A	N/A	N/A
236	-3000	3000	N/A	N/A	N/A
237	-3000	3000	N/A	N/A	N/A
238	-3000	3000	N/A	N/A	N/A
239	-3000	3000	N/A	N/A	N/A
240	-3000	3000	N/A	N/A	N/A
241	-3000	3000	N/A	N/A	N/A
242	-3000	3000	N/A	N/A	N/A
243	-3000	3000	N/A	N/A	N/A
244	-3000	3000	N/A	N/A	N/A
245	-3000	3000	N/A	N/A	N/A
246	-3000	3000	N/A	N/A	N/A
247	-3000	3000	N/A	N/A	N/A
248	-3000	3000	N/A	N/A	N/A
249	-3000	3000	N/A	N/A	N/A
250	-3000	3000	N/A	N/A	N/A

SYSTEM 10 DATA SHEET

Section 3 -- Lins/Conv Chan/Ranges/Sens

Channel (CHN)	Linearization Function (LIN)	Conversion Channel (CCH)	Range (RNG)	Sensitivity (SEN)
1	N/A	N/A	N/A	N/A
2	N/A	N/A	N/A	N/A
3	N/A	N/A	N/A	N/A
4	N/A	N/A	N/A	N/A
5	N/A	N/A	N/A	N/A
6	N/A	N/A	N/A	N/A
7	N/A	N/A	N/A	N/A
8	N/A	N/A	N/A	N/A
9	N/A	N/A	N/A	N/A
10	N/A	N/A	N/A	N/A
11	N/A	N/A	N/A	N/A
12	N/A	N/A	N/A	N/A
13	N/A	N/A	N/A	N/A
14	N/A	N/A	N/A	N/A
15	N/A	N/A	N/A	N/A
16	N/A	N/A	N/A	N/A
17	N/A	N/A	N/A	N/A
18	N/A	N/A	N/A	N/A
19	N/A	N/A	N/A	N/A
20	N/A	N/A	N/A	N/A
21	N/A	N/A	N/A	N/A
22	N/A	N/A	N/A	N/A
23	N/A	N/A	N/A	N/A
24	N/A	N/A	N/A	N/A
25	N/A	N/A	N/A	N/A
26	N/A	N/A	N/A	N/A
27	N/A	N/A	N/A	N/A
28	N/A	N/A	N/A	N/A
29	N/A	N/A	N/A	N/A
30	N/A	N/A	N/A	N/A
31	N/A	N/A	N/A	N/A
32	N/A	N/A	N/A	N/A
33	N/A	N/A	N/A	N/A
34	N/A	N/A	N/A	N/A
35	N/A	N/A	N/A	N/A
36	N/A	N/A	N/A	N/A
37	N/A	N/A	N/A	N/A
38	N/A	N/A	N/A	N/A
39	N/A	N/A	N/A	N/A
40	N/A	N/A	N/A	N/A
41	N/A	N/A	N/A	N/A
42	N/A	N/A	N/A	N/A
43	N/A	6	N/A	N/A
44	N/A	7	N/A	N/A
45	N/A	5	N/A	N/A
46	N/A	4	N/A	N/A
47	N/A	48	N/A	N/A
48	N/A	130	N/A	N/A
49	N/A	80	N/A	N/A
50	N/A	15	N/A	N/A

SYSTEM 10 DATA SHEET

Section 3 -- Lins/Conv Chan/Ranges/Sens

Channel (CHN)	Linearization Function (LIN)	Conversion Channel (CCH)	Range (RNG)	Sensitivity (SEN)
51	F1(CHN14)	N/A	N/A	N/A
52	N/A	10	N/A	N/A
53	N/A	10	N/A	N/A
54	N/A	10	N/A	N/A
55	N/A	9	N/A	N/A
56	N/A	110	N/A	N/A
57	N/A	10	N/A	N/A
58	N/A	N/A	N/A	N/A
59	N/A	24	N/A	N/A
60	F1(CHN14)	N/A	N/A	N/A
61	N/A	14	N/A	N/A
62	N/A	64	N/A	N/A
63	N/A	65	N/A	N/A
64	N/A	64	N/A	N/A
65	N/A	65	N/A	N/A
66	N/A	9	N/A	N/A
67	N/A	63	N/A	N/A
68	N/A	67	N/A	N/A
69	N/A	10	N/A	N/A
70	F2(CHN15)	N/A	N/A	N/A
71	N/A	15	N/A	N/A
72	N/A	70	N/A	N/A
73	N/A	71	N/A	N/A
74	N/A	74	N/A	N/A
75	N/A	75	N/A	N/A
76	N/A	10	N/A	N/A
77	N/A	72	N/A	N/A
78	N/A	77	N/A	N/A
79	N/A	10	N/A	N/A
80	F3(CHN16)	N/A	N/A	N/A
81	N/A	10	N/A	N/A
82	N/A	10	N/A	N/A
83	N/A	82	N/A	N/A
84	N/A	83	N/A	N/A
85	N/A	10	N/A	N/A
86	N/A	10	N/A	N/A
87	N/A	10	N/A	N/A
88	N/A	10	N/A	N/A
89	N/A	10	N/A	N/A
90	F4(CHN17)	N/A	N/A	N/A
91	N/A	N/A	N/A	N/A
92	N/A	10	N/A	N/A
93	N/A	10	N/A	N/A
94	N/A	10	N/A	N/A
95	N/A	10	N/A	N/A
96	N/A	10	N/A	N/A
97	N/A	10	N/A	N/A
98	N/A	10	N/A	N/A
99	N/A	201	N/A	N/A
100	N/A	N/A	N/A	N/A

SYSTEM 10 DATA SHEET

Section 3 -- Lins/Conv Chan/Ranges/Sens

Channel (CHN)	Linearization Function (LIN)	Conversion Channel (CCH)	Range (RNG)	Sensitivity (SEN)
101	N/A	10	N/A	N/A
102	N/A	10	N/A	N/A
103	N/A	10	N/A	N/A
104	N/A	10	N/A	N/A
105	N/A	10	N/A	N/A
106	N/A	10	N/A	N/A
107	N/A	10	N/A	N/A
108	N/A	10	N/A	N/A
109	N/A	10	N/A	N/A
110	F5(CHN18)	N/A	N/A	N/A
111	N/A	18	N/A	N/A
112	N/A	110	N/A	N/A
113	N/A	111	N/A	N/A
114	N/A	114	N/A	N/A
115	N/A	115	N/A	N/A
116	N/A	10	N/A	N/A
117	N/A	112	N/A	N/A
118	N/A	10	N/A	N/A
119	N/A	10	N/A	N/A
120	F6(CHN19)	N/A	N/A	N/A
121	N/A	58	N/A	N/A
122	N/A	90	N/A	N/A
123	N/A	122	N/A	N/A
124	N/A	10	N/A	N/A
125	N/A	10	N/A	N/A
126	N/A	10	N/A	N/A
127	N/A	10	N/A	N/A
128	N/A	10	N/A	N/A
129	N/A	10	N/A	N/A
130	F7(CHN20)	N/A	N/A	N/A
131	N/A	10	N/A	N/A
132	N/A	10	N/A	N/A
133	N/A	10	N/A	N/A
134	N/A	10	N/A	N/A
135	N/A	10	N/A	N/A
136	N/A	10	N/A	N/A
137	N/A	10	N/A	N/A
138	N/A	10	N/A	N/A
139	N/A	10	N/A	N/A
140	F8(CHN21)	N/A	N/A	N/A
141	N/A	10	N/A	N/A
142	N/A	9	N/A	N/A
143	N/A	10	N/A	N/A
144	N/A	10	N/A	N/A
145	N/A	10	N/A	N/A
146	N/A	10	N/A	N/A
147	N/A	10	N/A	N/A
148	N/A	10	N/A	N/A
149	N/A	10	N/A	N/A
150	F1(CHN150)	N/A	N/A	N/A

SYSTEM 10 DATA SHEET

Section 3 -- Lins/Conv Chan/Ranges/Sens

Channel (CHN)	Linearization Function (LIN)	Conversion Channel (CCH)	Range (RNG)	Sensitivity (SEN)
151	N/A	22	N/A	N/A
152	N/A	151	N/A	N/A
153	N/A	151	N/A	N/A
154	N/A	152	N/A	N/A
155	N/A	10	N/A	N/A
156	N/A	154	N/A	N/A
157	N/A	156	N/A	N/A
158	N/A	157	N/A	N/A
159	N/A	157	N/A	N/A
160	N/A	157	N/A	N/A
161	N/A	9	N/A	N/A
162	N/A	N/A	N/A	N/A
163	N/A	9	N/A	N/A
164	N/A	9	N/A	N/A
165	N/A	9	N/A	N/A
166	N/A	9	N/A	N/A
167	N/A	9	N/A	N/A
168	N/A	9	N/A	N/A
169	N/A	10	N/A	N/A
170	N/A	10	N/A	N/A
171	N/A	10	N/A	N/A
172	N/A	10	N/A	N/A
173	N/A	10	N/A	N/A
174	N/A	10	N/A	N/A
175	N/A	10	N/A	N/A
176	N/A	10	N/A	N/A
177	N/A	10	N/A	N/A
178	N/A	10	N/A	N/A
179	N/A	10	N/A	N/A
180	N/A	10	N/A	N/A
181	N/A	10	N/A	N/A
182	N/A	10	N/A	N/A
183	N/A	10	N/A	N/A
184	N/A	10	N/A	N/A
185	N/A	10	N/A	N/A
186	N/A	10	N/A	N/A
187	N/A	10	N/A	N/A
188	N/A	10	N/A	N/A
189	N/A	10	N/A	N/A
190	N/A	10	N/A	N/A
191	N/A	10	N/A	N/A
192	N/A	10	N/A	N/A
193	N/A	10	N/A	N/A
194	N/A	10	N/A	N/A
195	N/A	10	N/A	N/A
196	N/A	10	N/A	N/A
197	N/A	10	N/A	N/A
198	N/A	10	N/A	N/A
199	N/A	10	N/A	N/A
200	N/A	9	N/A	N/A

SYSTEM 10 DATA SHEET

Section 3 -- Lins/Conv Chan/Ranges/Sens

Channel (CHN)	Linearization Function (LIN)	Conversion Channel (CCH)	Range (RNG)	Sensitivity (SEN)
201	N/A	9	N/A	N/A
202	N/A	9	N/A	N/A
203	N/A	N/A	N/A	N/A
204	N/A	10	N/A	N/A
205	N/A	10	N/A	N/A
206	N/A	10	N/A	N/A
207	N/A	10	N/A	N/A
208	N/A	10	N/A	N/A
209	N/A	10	N/A	N/A
210	N/A	10	N/A	N/A
211	N/A	10	N/A	N/A
212	N/A	10	N/A	N/A
213	N/A	10	N/A	N/A
214	N/A	10	N/A	N/A
215	N/A	10	N/A	N/A
216	N/A	10	N/A	N/A
217	N/A	10	N/A	N/A
218	N/A	10	N/A	N/A
219	N/A	10	N/A	N/A
220	N/A	N/A	N/A	N/A
221	N/A	10	N/A	N/A
222	N/A	10	N/A	N/A
223	N/A	10	N/A	N/A
224	N/A	10	N/A	N/A
225	N/A	10	N/A	N/A
226	N/A	10	N/A	N/A
227	N/A	10	N/A	N/A
228	N/A	10	N/A	N/A
229	N/A	10	N/A	N/A
230	N/A	10	N/A	N/A
231	N/A	10	N/A	N/A
232	N/A	10	N/A	N/A
233	N/A	10	N/A	N/A
234	N/A	10	N/A	N/A
235	N/A	10	N/A	N/A
236	N/A	10	N/A	N/A
237	N/A	10	N/A	N/A
238	N/A	10	N/A	N/A
239	N/A	10	N/A	N/A
240	N/A	10	N/A	N/A
241	N/A	10	N/A	N/A
242	N/A	10	N/A	N/A
243	N/A	10	N/A	N/A
244	N/A	10	N/A	N/A
245	N/A	10	N/A	N/A
246	N/A	10	N/A	N/A
247	N/A	10	N/A	N/A
248	N/A	10	N/A	N/A
249	N/A	10	N/A	N/A
250	N/A	N/A	N/A	N/A

SYSTEM 10 DATA SHEET

Section 4 -- Calculations/Analog Outputs

Channel (CHN)	Calculation (CLC)
43	1.0(CHN6- CHN4)+0
44	1.0(CHN7- CHN3)+.0
45	1.0(CHN5- CHN3)+.0
46	1.0(CHN4- CHN3)+.0
47	1(CHN48+ CHN49)+0
48	1(CHN130+ CHN140)+0
49	1(CHN80+ CHN90)+0
50	(CHN15)/381+.00
53	5000(CHN10)+0
54	5000(CHN10)+0
56	385(CHN110)+0
61	5.846(CHN14)+0
62	1(CHN64)(CHN60)+0
63	1(CHN65)(CHN61)+0
67	1(CHN63+ CHN62)+0
68	(CHN67)/371+.00
71	1.4911(CHN15)+0
72	1(CHN70)(CHN74)+0
73	1(CHN71)(CHN75)+0
77	1(CHN72+ CHN73)+0
78	(CHN77)/371+.00
83	1.0(CHN82- CHN81)+0
84	133.14(CHN83)(CHN85)+0
99	16.03(CHN201)+.0
111	1.516(CHN18)+0
112	1(CHN110)(CHN114)+0
113	1(CHN111)(CHN115)+0
117	1(CHN112+ CHN113)+0
121	385(CHN58)+0
122	1.0(CHN90+ CHN140)+.0
123	1.0(CHN122+ CHN91)+.0
151	1.00(CHN22)+.00
152	.50(CHN151+ CHN22)+.00
153	.50(CHN151+ CHN152)+.00
154	.50(CHN152+ CHN153)+.00
156	1.00(CHN154)+.00
157	1.00(CHN156)+.00
158	1.00(CHN157)+.00
159	.50(CHN157+ CHN158)+.00
160	.5(CHN157+ CHN158)+.0

Channel (CHN)	Analog Outputs (ANO)
66	3898

SYSTEM 10 DATA SHEET

Section 5 -- Executes

Execute Base Group 1 (XBG1) = 1

Execute Base Group 2 (XBG2) = 2

Number	Execute (EXU)	Execute-bar (EXU/)
0	TAR12:CHN200=0	N/A
1	CHN201=CHN12	N/A
2	N/A	N/A
3	N/A	N/A
4	N/A	N/A
5	PAGE1	N/A
6	PAGE2	N/A
7	PAGE3	N/A
8	PAGE4	N/A
9	PRI0	N/A
10	UNL18	N/A
11	N/A	N/A
12	N/A	N/A
13	N/A	N/A
14	N/A	N/A
15	N/A	N/A
16	N/A	N/A
17	N/A	N/A
18	UNL18	N/A
19	N/A	N/A
20	N/A	N/A
21	N/A	N/A
22	N/A	N/A
23	N/A	N/A
24	N/A	N/A
25	N/A	N/A
26	N/A	N/A
27	N/A	N/A
28	N/A	N/A
29	N/A	N/A
30	UNL101:CHN101=0	LOK101
31	N/A	N/A

SYSTEM 10 DATA SHEET

Section 6 -- Communications Protocol

Baud Rate (BAU) = 2,7,2,0

Delay (DLY) = 0

Output Terminator (OPT) = [0D]

Command Terminator (CMT) = [0D]

End of Transmission (EOT) = [0D]

Timeout (TMO) = N/A

Other :

Characters per channel (CPC) = 9

Columns (CLM) = 1

Scan (SCN) = 1,250

Terminator (TER) = 250

System Base Channel (SBC) = 1

Assign Satellite Number (ASN) = 0

Communications (COM) = 26

Execute Mode (EXM) = DISABLED

Display (DIS) = N/A

Logo (LGO) = FUEL PUMP TEST STAND

Header (HDR) =

Tailer (TLR) =

SYSTEM 10 DATA SHEET

Section 7 -- Video Status

Channel (CHN)	Status (STS)	Bit Cntrl Status (VBC)	Less Than Status (VLT)	Between Status (VBT)	Greater Than Status (VGT)
1	INT	N/A	WO	WO	WO
2	INT	N/A	WO	WO	WO
3	INT	N/A	WO	WO	WO
4	INT	N/A	WO	WO	WO
5	INT	N/A	WO	WO	WO
6	INT	N/A	WO	WO	WO
7	INT	N/A	WO	WO	WO
8	INT	N/A	WO	WO	WO
9	INT	N/A	WO	WO	WO
10	INT	N/A	WO	WO	WO
11	INT	N/A	WO	WO	WO
12	INT	N/A	WO	WO	WO
13	INT	N/A	WO	WO	WO
14	INT	N/A	WO	WO	WO
15	INT	N/A	WO	WO	WO
16	INT	N/A	WO	WO	WO
17	INT	N/A	WO	WO	WO
18	INT	N/A	WO	WO	WO
19	INT	N/A	WO	WO	WO
20	INT	N/A	WO	WO	WO
21	INT	N/A	WO	WO	WO
22	INT	N/A	WO	WO	WO
23	INT	N/A	WO	WO	WO
24	INT	N/A	WO	WO	WO
25	INT	N/A	WO	WO	WO
26	INT	N/A	WO	WO	WO
27	INT	N/A	WO	WO	WO
28	INT	N/A	WO	WO	WO
29	INT	N/A	WO	WO	WO
30	INT	N/A	WO	WO	WO
31	INT	N/A	WO	WO	WO
32	INT	N/A	WO	WO	WO
33	INT	N/A	WO	WO	WO
34	INT	N/A	WO	WO	WO
35	INT	N/A	WO	WO	WO
36	INT	N/A	WO	WO	WO
37	INT	N/A	WO	WO	WO
38	INT	N/A	WO	WO	WO
39	INT	N/A	WO	WO	WO
40	INT	N/A	WO	WO	WO
41	INT	N/A	WO	WO	WO
42	INT	N/A	WO	WO	WO
43	INT	N/A	WO	WO	WO
44	INT	N/A	WO	WO	WO
45	INT	N/A	WO	WO	WO
46	INT	N/A	WO	WO	WO
47	INT	N/A	WO	WO	WO
48	INT	N/A	WO	WO	WO
49	INT	N/A	WO	WO	WO
50	INT	N/A	WO	WO	WO

SYSTEM 10 DATA SHEET

Section 7 -- Video Status

Channel (CHN)	Status (STS)	Bit Cntrl Status (VBC)	Less Than Status (VLT)	Between Status (VBT)	Greater Than Status (VGT)
51	INT	N/A	WO	WO	WO
52	INT	N/A	WO	WO	WO
53	INT	N/A	WO	WO	WO
54	INT	N/A	WO	WO	WO
55	INT	N/A	WO	WO	WO
56	INT	N/A	WO	WO	WO
57	INT	N/A	WO	WO	WO
58	INT	N/A	WO	WO	WO
59	INT	N/A	WO	WO	WO
60	INT	N/A	WO	WO	WO
61	INT	N/A	WO	WO	WO
62	INT	N/A	WO	WO	WO
63	INT	N/A	WO	WO	WO
64	INT	N/A	WO	WO	WO
65	INT	N/A	WO	WO	WO
66	INT	N/A	WO	WO	WO
67	INT	N/A	WO	WO	WO
68	INT	N/A	WO	WO	WO
69	INT	N/A	WO	WO	WO
70	INT	N/A	WO	WO	WO
71	INT	N/A	WO	WO	WO
72	INT	N/A	WO	WO	WO
73	INT	N/A	WO	WO	WO
74	INT	N/A	WO	WO	WO
75	INT	N/A	WO	WO	WO
76	INT	N/A	WO	WO	WO
77	INT	N/A	WO	WO	WO
78	INT	N/A	WO	WO	WO
79	INT	N/A	WO	WO	WO
80	INT	N/A	WO	WO	WO
81	INT	N/A	WO	WO	WO
82	INT	N/A	WO	WO	WO
83	INT	N/A	WO	WO	WO
84	INT	N/A	WO	WO	WO
85	INT	N/A	WO	WO	WO
86	INT	N/A	WO	WO	WO
87	INT	N/A	WO	WO	WO
88	INT	N/A	WO	WO	WO
89	INT	N/A	WO	WO	WO
90	INT	N/A	WO	WO	WO
91	INT	N/A	WO	WO	WO
92	INT	N/A	WO	WO	WO
93	INT	N/A	WO	WO	WO
94	INT	N/A	WO	WO	WO
95	INT	N/A	WO	WO	WO
96	INT	N/A	WO	WO	WO
97	INT	N/A	WO	WO	WO
98	INT	N/A	WO	WO	WO
99	INT	N/A	WO	WO	WO
100	INT	N/A	WO	WO	WO

SYSTEM 10 DATA SHEET

Section 7 -- Video Status

Channel (CHN)	Status (STS)	Bit Cntrl Status (VBC)	Less Than Status (VLT)	Between Status (VBT)	Greater Than Status (VGT)
101	INT	N/A	WO	WO	WO
102	INT	N/A	WO	WO	WO
103	INT	N/A	WO	WO	WO
104	INT	N/A	WO	WO	WO
105	INT	N/A	WO	WO	WO
106	INT	N/A	WO	WO	WO
107	INT	N/A	WO	WO	WO
108	INT	N/A	WO	WO	WO
109	INT	N/A	WO	WO	WO
110	INT	N/A	WO	WO	WO
111	INT	N/A	WO	WO	WO
112	INT	N/A	WO	WO	WO
113	INT	N/A	WO	WO	WO
114	INT	N/A	WO	WO	WO
115	INT	N/A	WO	WO	WO
116	INT	N/A	WO	WO	WO
117	INT	N/A	WO	WO	WO
118	INT	N/A	WO	WO	WO
119	INT	N/A	WO	WO	WO
120	INT	N/A	WO	WO	WO
121	INT	N/A	WO	WO	WO
122	INT	N/A	WO	WO	WO
123	INT	N/A	WO	WO	WO
124	INT	N/A	WO	WO	WO
125	INT	N/A	WO	WO	WO
126	INT	N/A	WO	WO	WO
127	INT	N/A	WO	WO	WO
128	INT	N/A	WO	WO	WO
129	INT	N/A	WO	WO	WO
130	INT	N/A	WO	WO	WO
131	INT	N/A	WO	WO	WO
132	INT	N/A	WO	WO	WO
133	INT	N/A	WO	WO	WO
134	INT	N/A	WO	WO	WO
135	INT	N/A	WO	WO	WO
136	INT	N/A	WO	WO	WO
137	INT	N/A	WO	WO	WO
138	INT	N/A	WO	WO	WO
139	INT	N/A	WO	WO	WO
140	INT	N/A	WO	WO	WO
141	INT	N/A	WO	WO	WO
142	INT	N/A	WO	WO	WO
143	INT	N/A	WO	WO	WO
144	INT	N/A	WO	WO	WO
145	INT	N/A	WO	WO	WO
146	INT	N/A	WO	WO	WO
147	INT	N/A	WO	WO	WO
148	INT	N/A	WO	WO	WO
149	INT	N/A	WO	WO	WO
150	INT	N/A	WO	WO	WO

SYSTEM 10 DATA SHEET

Section 7 -- Video Status

Channel (CHN)	Status (STS)	Bit Cntrl Status (VBC)	Less Than Status (VLT)	Between Status (VBT)	Greater Than Status (VGT)
151	INT	N/A	WO	WO	WO
152	INT	N/A	WO	WO	WO
153	INT	N/A	WO	WO	WO
154	INT	N/A	WO	WO	WO
155	INT	N/A	WO	WO	WO
156	INT	N/A	WO	WO	WO
157	INT	N/A	WO	WO	WO
158	INT	N/A	WO	WO	WO
159	INT	N/A	WO	WO	WO
160	INT	N/A	WO	WO	WO
161	INT	N/A	WO	WO	WO
162	INT	N/A	WO	WO	WO
163	INT	N/A	WO	WO	WO
164	INT	N/A	WO	WO	WO
165	INT	N/A	WO	WO	WO
166	INT	N/A	WO	WO	WO
167	INT	N/A	WO	WO	WO
168	INT	N/A	WO	WO	WO
169	INT	N/A	WO	WO	WO
170	INT	N/A	WO	WO	WO
171	INT	N/A	WO	WO	WO
172	INT	N/A	WO	WO	WO
173	INT	N/A	WO	WO	WO
174	INT	N/A	WO	WO	WO
175	INT	N/A	WO	WO	WO
176	INT	N/A	WO	WO	WO
177	INT	N/A	WO	WO	WO
178	INT	N/A	WO	WO	WO
179	INT	N/A	WO	WO	WO
180	INT	N/A	WO	WO	WO
181	INT	N/A	WO	WO	WO
182	INT	N/A	WO	WO	WO
183	INT	N/A	WO	WO	WO
184	INT	N/A	WO	WO	WO
185	INT	N/A	WO	WO	WO
186	INT	N/A	WO	WO	WO
187	INT	N/A	WO	WO	WO
188	INT	N/A	WO	WO	WO
189	INT	N/A	WO	WO	WO
190	INT	N/A	WO	WO	WO
191	INT	N/A	WO	WO	WO
192	INT	N/A	WO	WO	WO
193	INT	N/A	WO	WO	WO
194	INT	N/A	WO	WO	WO
195	INT	N/A	WO	WO	WO
196	INT	N/A	WO	WO	WO
197	INT	N/A	WO	WO	WO
198	INT	N/A	WO	WO	WO
199	INT	N/A	WO	WO	WO
200	INT	N/A	WO	WO	WO

SYSTEM 10 DATA SHEET

Section 7 -- Video Status

Channel (CHN)	Status (STS)	Bit Cntrl Status (VBC)	Less Than Status (VLT)	Between Status (VBT)	Greater Than Status (VGT)
201	INT	N/A	WO	WO	WO
202	INT	N/A	WO	WO	WO
203	INT	N/A	WO	WO	WO
204	INT	N/A	WO	WO	WO
205	INT	N/A	WO	WO	WO
206	INT	N/A	WO	WO	WO
207	INT	N/A	WO	WO	WO
208	INT	N/A	WO	WO	WO
209	INT	N/A	WO	WO	WO
210	INT	N/A	WO	WO	WO
211	INT	N/A	WO	WO	WO
212	INT	N/A	WO	WO	WO
213	INT	N/A	WO	WO	WO
214	INT	N/A	WO	WO	WO
215	INT	N/A	WO	WO	WO
216	INT	N/A	WO	WO	WO
217	INT	N/A	WO	WO	WO
218	INT	N/A	WO	WO	WO
219	INT	N/A	WO	WO	WO
220	INT	N/A	WO	WO	WO
221	INT	N/A	WO	WO	WO
222	INT	N/A	WO	WO	WO
223	INT	N/A	WO	WO	WO
224	INT	N/A	WO	WO	WO
225	INT	N/A	WO	WO	WO
226	INT	N/A	WO	WO	WO
227	INT	N/A	WO	WO	WO
228	INT	N/A	WO	WO	WO
229	INT	N/A	WO	WO	WO
230	INT	N/A	WO	WO	WO
231	INT	N/A	WO	WO	WO
232	INT	N/A	WO	WO	WO
233	INT	N/A	WO	WO	WO
234	INT	N/A	WO	WO	WO
235	INT	N/A	WO	WO	WO
236	INT	N/A	WO	WO	WO
237	INT	N/A	WO	WO	WO
238	INT	N/A	WO	WO	WO
239	INT	N/A	WO	WO	WO
240	INT	N/A	WO	WO	WO
241	INT	N/A	WO	WO	WO
242	INT	N/A	WO	WO	WO
243	INT	N/A	WO	WO	WO
244	INT	N/A	WO	WO	WO
245	INT	N/A	WO	WO	WO
246	INT	N/A	WO	WO	WO
247	INT	N/A	WO	WO	WO
248	INT	N/A	WO	WO	WO
249	INT	N/A	WO	WO	WO
250	INT	N/A	WO	WO	WO

SYSTEM 10 DATA SHEET

Section 8 -- Conditionals/Commands/Messages

Number	Conditional (CDL)
1	N/A
2	N/A
3	N/A
4	N/A
5	N/A
6	N/A
7	N/A
8	N/A
9	N/A
10	N/A

Number	Command (CMD)	Command-bar (CMD/)
1	N/A	N/A
2	N/A	N/A
3	N/A	N/A
4	N/A	N/A
5	N/A	N/A
6	N/A	N/A
7	N/A	N/A
8	N/A	N/A
9	N/A	N/A
10	N/A	N/A

Number	Message (MES)
1	GO,
2	GO,
3	GO,
4	GO,
5	GO,
6	GO,
7	GO,
8	GO,
9	GO,
10	GO,
11	GO,
12	GO,
13	GO,
14	GO,
15	GO,
16	GO,

SYSTEM 10 DATA SHEET

Section 9 -- Bit Designator Pair/Bit State Display

Bit	Designator pair (BDP)
1	WO,HIGH:RW,LOW
2	WO,ON:RW,OFF
3	WO,OPEN:RW,CLOSED
4	WO,UP:RW,DOWN
5	WO,IN:RW,OUT
6	WO,GO:RW,STOP
7	WO,SET:RW,RESET
8	WO,PASS:RW,FAIL
9	OG,HIGH:OR,LOW
10	OG,ON:OR,OFF
11	OG,OPEN:OR,CLOSED
12	OG,UP:OR,DOWN
13	OG,IN:OR,OUT
14	OG,GO:OR,STOP
15	OG,SET:OR,RESET
16	OG,PASS:OR,FAIL
17	WG,HIGH:WR,LOW
18	WG,ON:WR,OFF
19	WG,OPEN:WR,CLOSED
20	WG,UP:WR,DOWN
21	WG,IN:WR,OUT
22	WG,GO:WR,STOP
23	WG,SET:WR,RESET
24	WG,PASS:WR,FAIL
25	GO,HIGH:RO,LOW
26	GO,ON:RO,OFF
27	GO,OPEN:RO,CLOSED
28	GO,UP:RO,DOWN
29	GO,IN:RO,OUT
30	GO,GO:RO,STOP
31	GO,SET:RO,RESET
32	GO,PASS:RO,FAIL

Bit	State display (BSD)
0 TO 766	1
767 TO 933	9
934 TO 999	1

MISCELLANEOUS

Sign-on page (SOP) = 7

Video Display Unit (VDU) = C,60

Refresh (REF) = 1

B Video Signal (BVS) = 95

Video Scan Symbol (VSS) = 1

SYSTEM 10 DATA SHEET

Section 10 -- AIO/BIO commands

ASLOT/BSLOT	RANK
2	1
3	2
4	3
5	4
6	5
7	6
8	7

Section 10 -- Logic Source

Bit	Source (SRC)
0 TO 32	LIM,NON
33 TO 47	EXT,NON
48	LIM,NON
49 TO 63	EXT,NON
64	LIM,NON
65 TO 79	EXT,NON
80	LIM,NON
81 TO 85	EXT,NON
86	LIM,NON
87 TO 95	EXT,NON
96	LIM,NON
97 TO 111	EXT,NON
112	LIM,NON
113 TO 999	EXT,NON

SYSTEM 10 DATA SHEET

Section 11 -- Printer commands

Printer Baud Rate (PBR) = 15,8,2,0

Inter Character Delay (ICD) = 7

End of Line (EOL) = [0D,0A]

End of Page (EOP) = [0C]

Blank Line Suppression (BLS) = 0

Default Header / Tailer (DHT) = 98,99

Channels Per Line (CPL) = 3

Template (TMP) = CCC DDDDDDDDD L

SYSTEM 10 DATA SHEET

Section 12 -- History card commands

NO HISTORY CARD PRESENT

SYSTEM 10 DATA SHEET

Section 13 -- Satellite commands

NODE	CHANNEL	RANGE	(SAT)

NO SATELLITE CARD PRESENT

SYSTEM 10 DATA SHEET

Section 14 -- BACI commands

NO BACI'S PRESENT

APPENDIX 2

DAS USER'S GUIDE

Program 'USERTIPS', Version 2.0

'USERTIPS' Topic Menu

a. The Types of Computers You Can Use.
b. The Specific Meanings of 'Press' and 'Enter'.
c. The Special Function of Program 'COMMLINK'.
d. How to Abort a Program and Return to 'Menu'.
e. What To Do When You Encounter 'Errors'.
f. Setting System 'Time' and 'Date'.
g. Transferring SofPAC Programs to Your 'Hard Disk'.
h. On Making Copies of Your SofPACs.
i. Software Update Policy.
j. Hard Copies of the Display Screen.
k. Locating the Cursor.
l. Changing SofPAC configurations using 'CONFIG'.
m. The difference in Printer 'Types'.
z. Return to the 'Program Select Menu'.

To make selection, press corresponding key
or, locate cursor and press enter...

The Types of Computers You Can Use.

Other than those supplied on special order, or for use with the Daytronic Industrial Process Computer (IPC), all SofPACS are written for use on one of the following:

(a) The IBM PC (with dual floppy drives),
(b) The IBM PCXT,
(c) The IBM PCAT,
(d) IBM-compatible* equivalents to the above.

* The term 'IBM-compatible' is often misused and seems to have various meanings. While PCs so described have been used successfully with our SofPACs, there can be no assurance that such would be the case with any particular non-IBM PC.

Press any key to return to the 'Topic Menu'...

The Specific Meanings of 'Press' and 'Enter'.

In these programs, when you are asked to 'Press' a key, you literally should do just that. You should not press the 'Return' key.

However, when you are asked to 'Enter' an item, you should type it on the keyboard and then press the 'Return' key to complete the 'entry'.

Remember, 'Press' and "Enter' have different and specific meanings.

Press any key to return to the 'Topic Menu'...

The Special Function of Program 'COMMLINK'.

Most (but not all) SofPAC programs involve communication between the PC and the DataPAC.

In order not to burden all such programs with the delays inherent in checking and establishing the proper communication link each time they are run, this function is performed initially each session (just once and then only if needed) by Program COMMLINK.

COMMLINK then passes on to the other programs such required information as the Baud rate in use, the number of system data channels, the PC disk configuration, and so forth.

Don't worry about when to run COMMLINK. If you select a program that requires it, and it has not already been run, the system will tell you so.

Press any key to return to the 'Topic Menu'...

How to Abort a Program and Return to the 'Menu'.

If you realize that you have selected the wrong program or if, at any time, you wish to abort a program's operation and return in an orderly manner to the 'Program Select Menu', you may do so by pressing the 'F1' key.

This orderly exit procedure will not require that Program 'COMMLINK' be rerun.

Press any key to return to the 'Topic Menu'...

What To Do If You Encounter 'Errors'.

'Errors' during program operation can result from program bugs, improper user inputs, or hardware malfunctions.

Since the cause of an error may be transient, it is usually in order to try to rerun the program. If the error persists, a deeper investigation is warranted.

All SofPAC programs detect errors automatically and present the user with the options of (a) returning to the 'Menu' (to rerun the program), or (b) displaying and printing an analysis of important program variables, which information is decidedly helpful in diagnosing program problems.

When contacting the factory for assistance, you should have a copy of the program variable analysis available for discussion.

Press any key to return to the 'Topic Menu'...

Setting System 'Time' and 'Date'.

The PC and the DataPAC both have internal clocks that track time and date. The PC clock is volatile; it must be set each time it is turned on. The DataPAC clock has battery backup; it is pre-set at the factory and keeps time indefinitely.

Program COMMLINK automatically sets the PC clock to conform to the DataPAC clock, each time it is run. It also allows you to reset the clocks, should the reading be incorrect.

Not all programs require that COMMLINK be run (or even that a DataPAC be connected). If you select such a program, and the PC clock has not otherwise been set, the system will ask you to enter the time and date on the keyboard.

Press any key to return to the 'Topic Menu'...

Transferring SofPAC Programs to Your 'Hard Disk'.

Users of the PCXT and PCAT can operate SofPAC programs from their 'hard disk', using the following procedure:

(1) Boot the system with the DOS disk in Drive A.
(2) Enter the command, 'COPY A:*.*C:'.
(3) Install the SofPAC 'LIBRARY' disk in Drive A and enter the command, 'COPY A:*.*C:'.
(4) If your SofPAC contains more than one LIBRARY disk, repeat Step 3 for any additional disks.

Your system will now boot up and run the SofPAC programs from the hard disk. (Drive A must be empty during boot-up.)

NOTE: Some SofPACs have programs named 'MENU' and "AUTOEXEC.BAT'. Their installation on the hard disk will destroy any existing programs stored under these commonly used names.

Press any key to return to the 'Topic Menu'...

On Making Copies of Your SofPACs

All SofPACs are licensed according to the 'Daytronic Software License Agreement', dated 9 April 1985, a copy of which is included with each SofPAC. You should be familiar with the detailed provisions of this document.

You have the right to make a single archival backup copy for purposes of replacing the original, should it become defective, so long as the copy is used in the same application for which the original was purchased.

The user of this software has the right to purchase any number of additional copies, to be used only at the site of the application for which the original software was purchased, for a price of 35% of the list price of the original software.

Press any key to return to the 'Topic Menu'...

Software Update Policy

SofPACS are continually updated--to correct 'bugs' or to add enhanced features or performance. A liberal update policy for existing customers is in effect:

(a) Where the updates are to correct major 'bugs' that can hinder performance of intended functions, updates will be supplied free of charge, upon request.

(b) Where the updates provide substantially enhanced features or performance, they will be supplied for either $50.00 or the difference between the list price of the new software and the price originally paid, whichever is greater.

Contact your Daytronic Sales Representative for assistance.

Press any key to return to the 'Topic Menu'...

Hardcopies of the Display Screen

At any time during the operation of a SofPAC program, except during DataPAC communication and file I/O, you may obtain a hard copy of the display screen simply by pressing the 'F10' key. This function works the same as pressing the 'Shift' and 'PrtSc' keys simultaneously.

Press any key to return to the 'Topic Menu'...

Locating the Cursor

At times during operation of SofPAC programs, the operator will be presented with a 'menu' of choices. These choices will be in the form of a table with one of the choices highlighted.

This highlight is the 'cursor' and it can be moved using the cursor control keys located to the right of the keyboard.

If there are more choices than can be printed on the page at one time, advancing the cursor beyond the top or bottom will cause the choices to scroll, one choice at a time.

A beep is used to indicate the end of the choices in either direction.

Changing the SofPAC configuration using 'CONFIG'.

The operation of the SofPACs is controlled by the set-up as defined by the program 'CONFIG'. This program establishes the type of monitor being used, the 'paths' for both the SofPAC programs and any data being stored or retrieved, the communication port connected to the DataPAC, the type of printer used, and whether or not this information is displayed upon SofPAC start-up.

The choices for monitor type being used are Color and Monochrome. The path is any valid path in the form of drive designation followed by subdirectory i.e. C:, C:\SUPERPAC, etc. The choices for communication ports are 'COM1' and 'COM2'. The choices for printer types are 'Type I' and 'Type II'. (See section on Printer Types for explanation.)

The difference in Printer 'Types'.

For use with SofPACs, the difference in Printer 'Types' is in the command for setting the horizontal 'tabs'. Printers using the command sequence <ESC> 'eØ' CHR$(n) are considered to be 'Type I', printers using the command sequence <ESC> 'D' are considered to be 'Type II'. Printers that accept both commands can use either choice.

Press any key to return to the 'Topic Menu'...

APPENDIX 3

HALON SYSTEM INSTALLATION, OPERATION, AND MAINTENANCE MANUAL

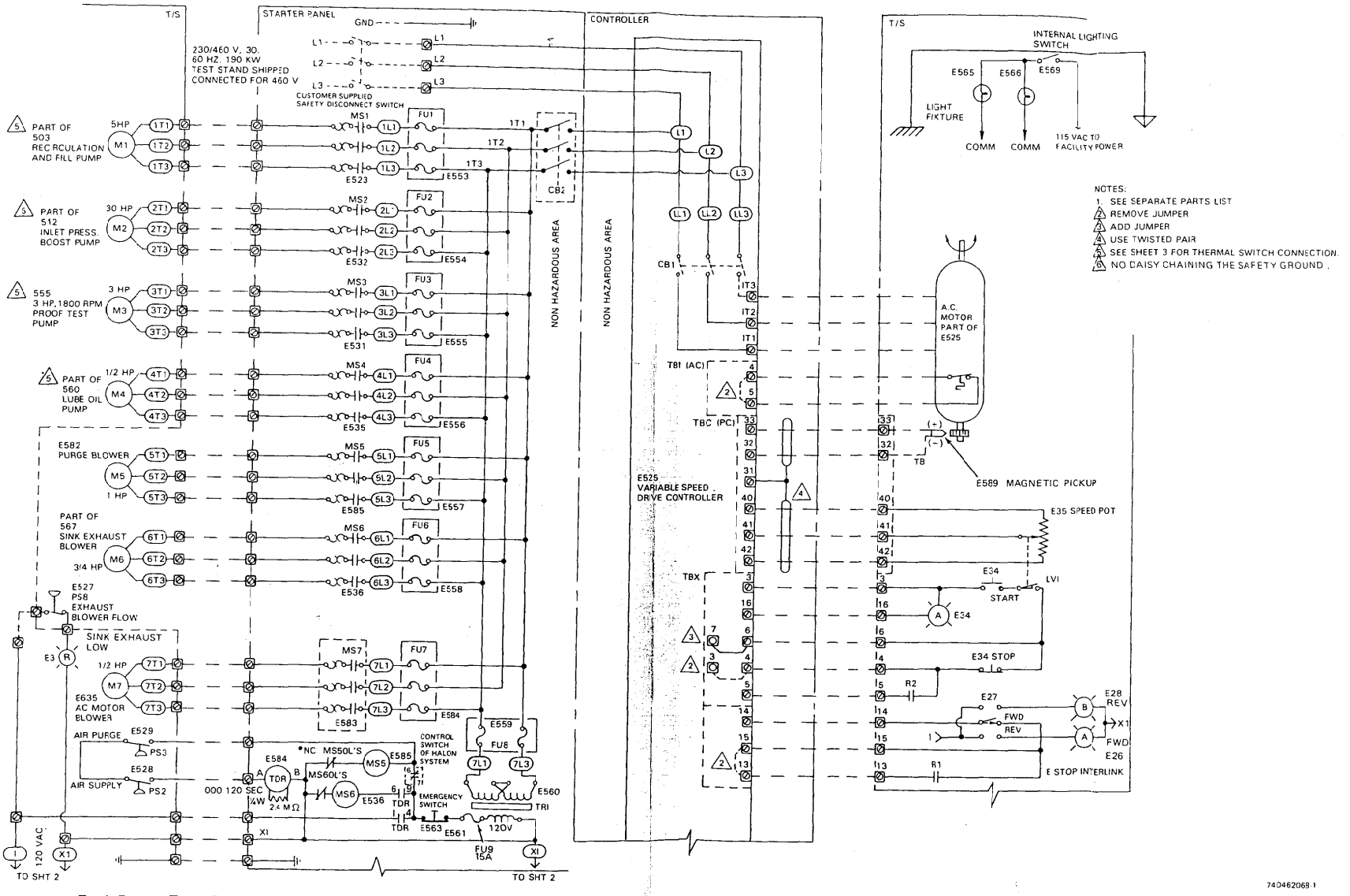

Fuel Pump Test Stand - Electrical Schematic (Sheet 1 of 4)

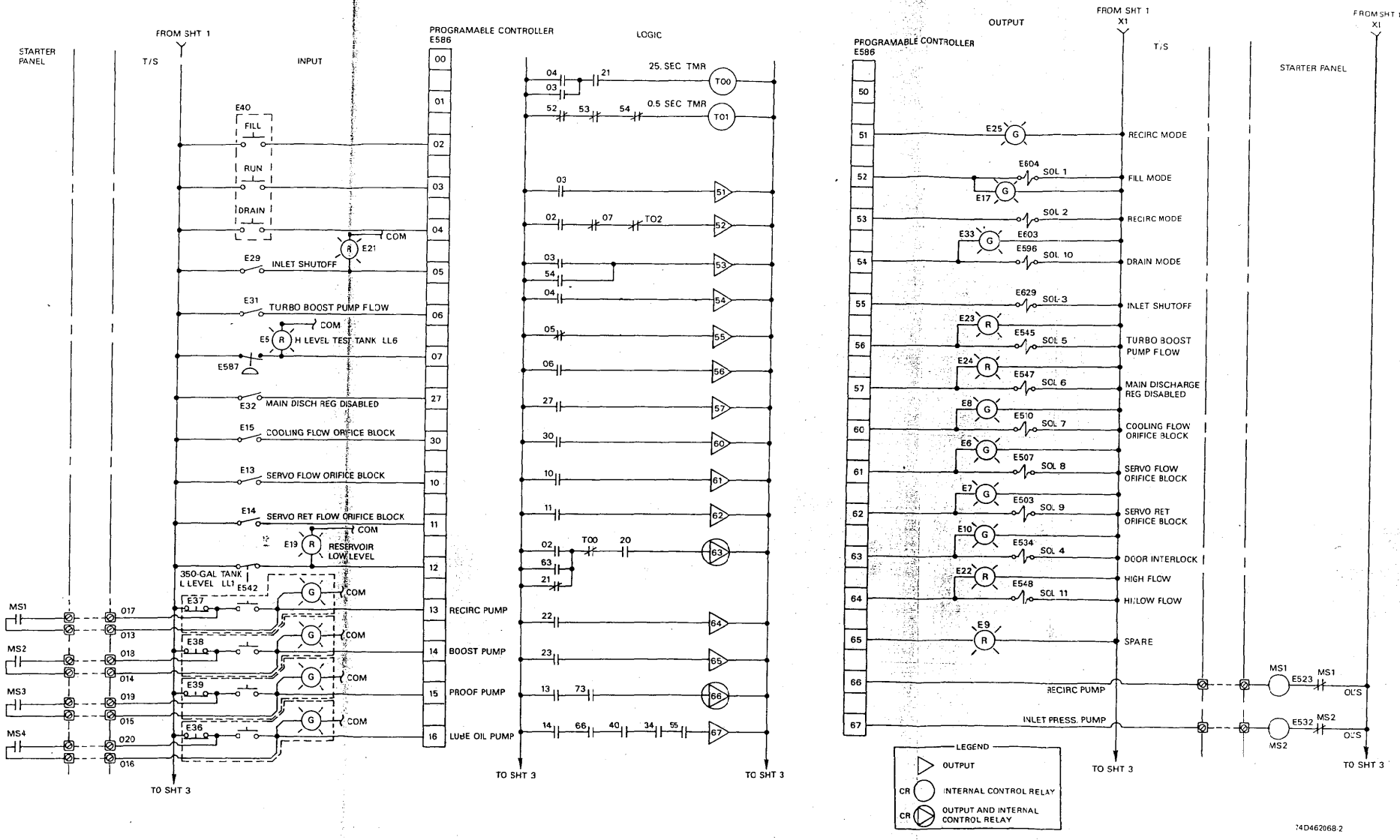

Fuel Pump Test Stand - Electrical Schematic (Sheet 2 of 4)

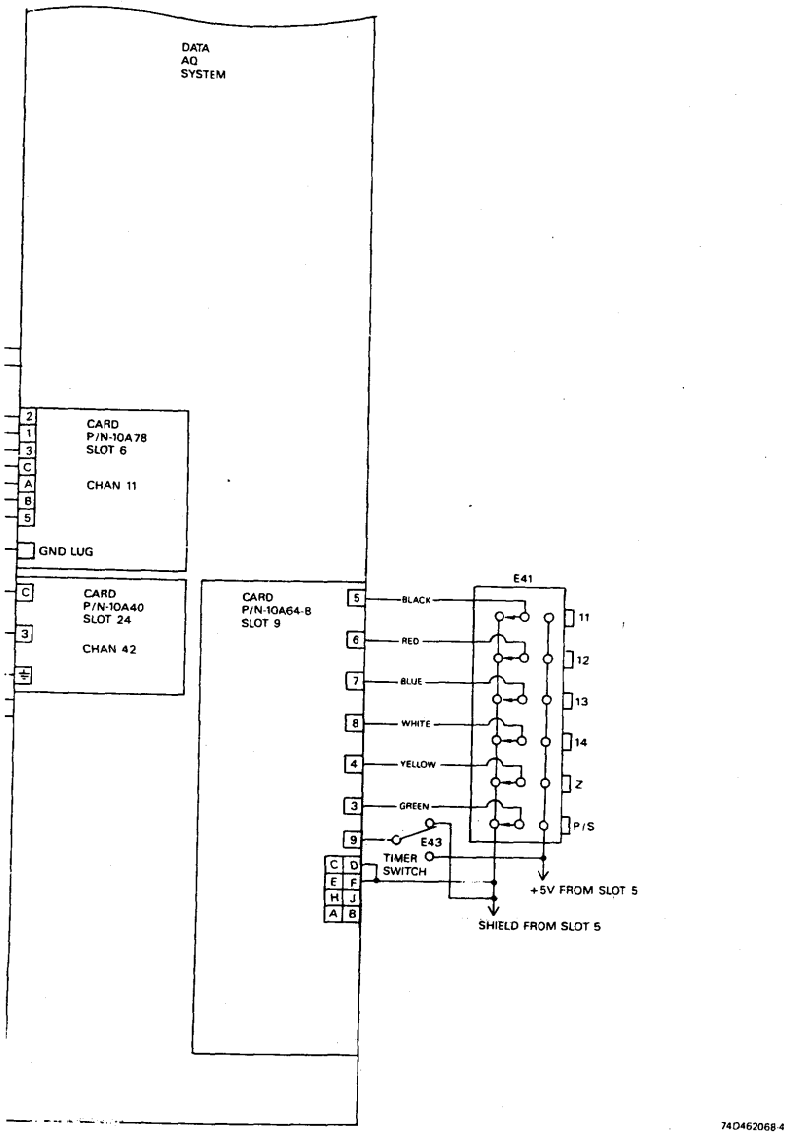

74D462068-4

Fuel Pump Test Stand - Electrical Schematic (Sheet 4 of 4)

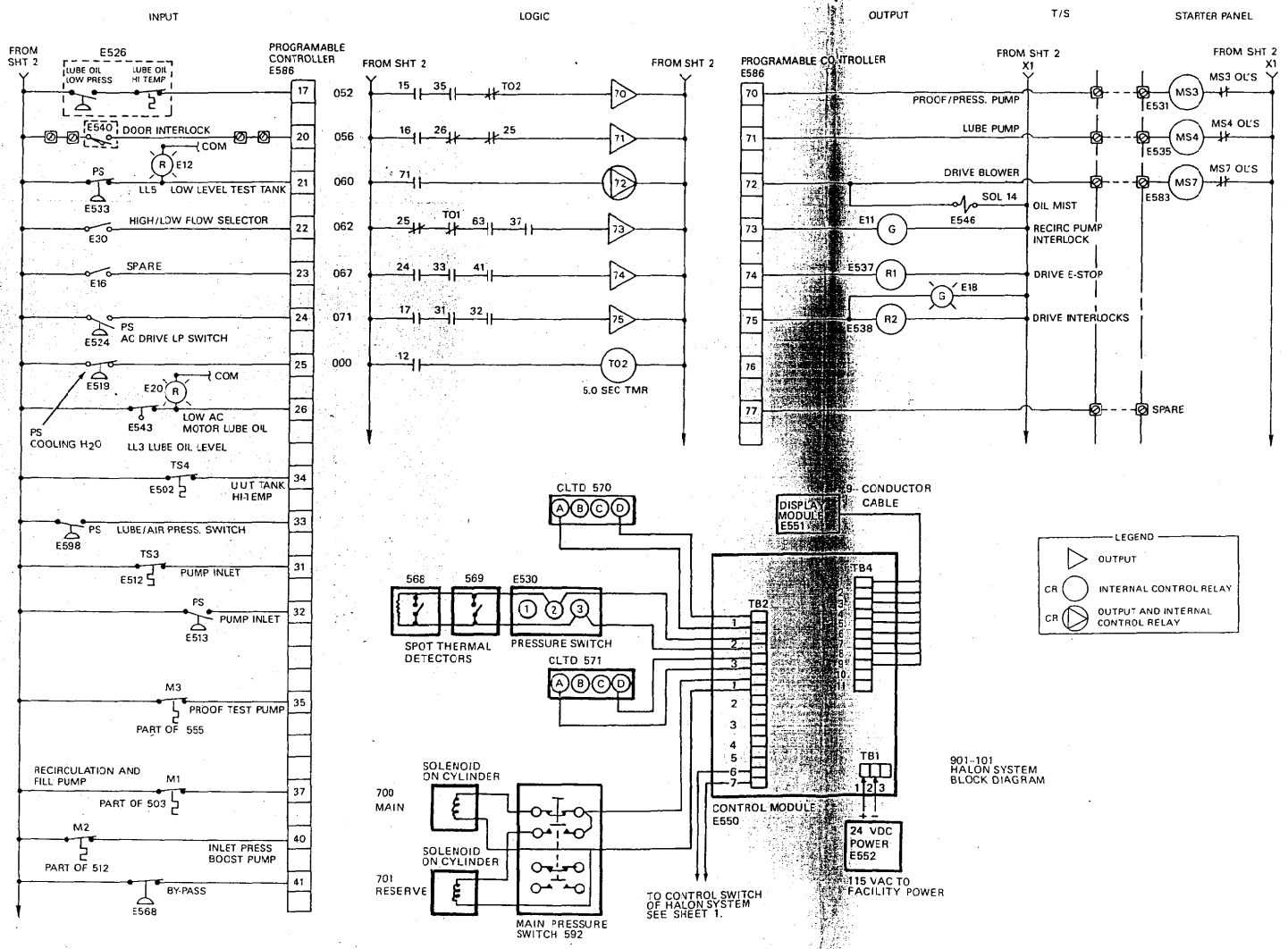

Fuel Pump Test Stand - Electrical Schematic (Sheet 3 of 4).

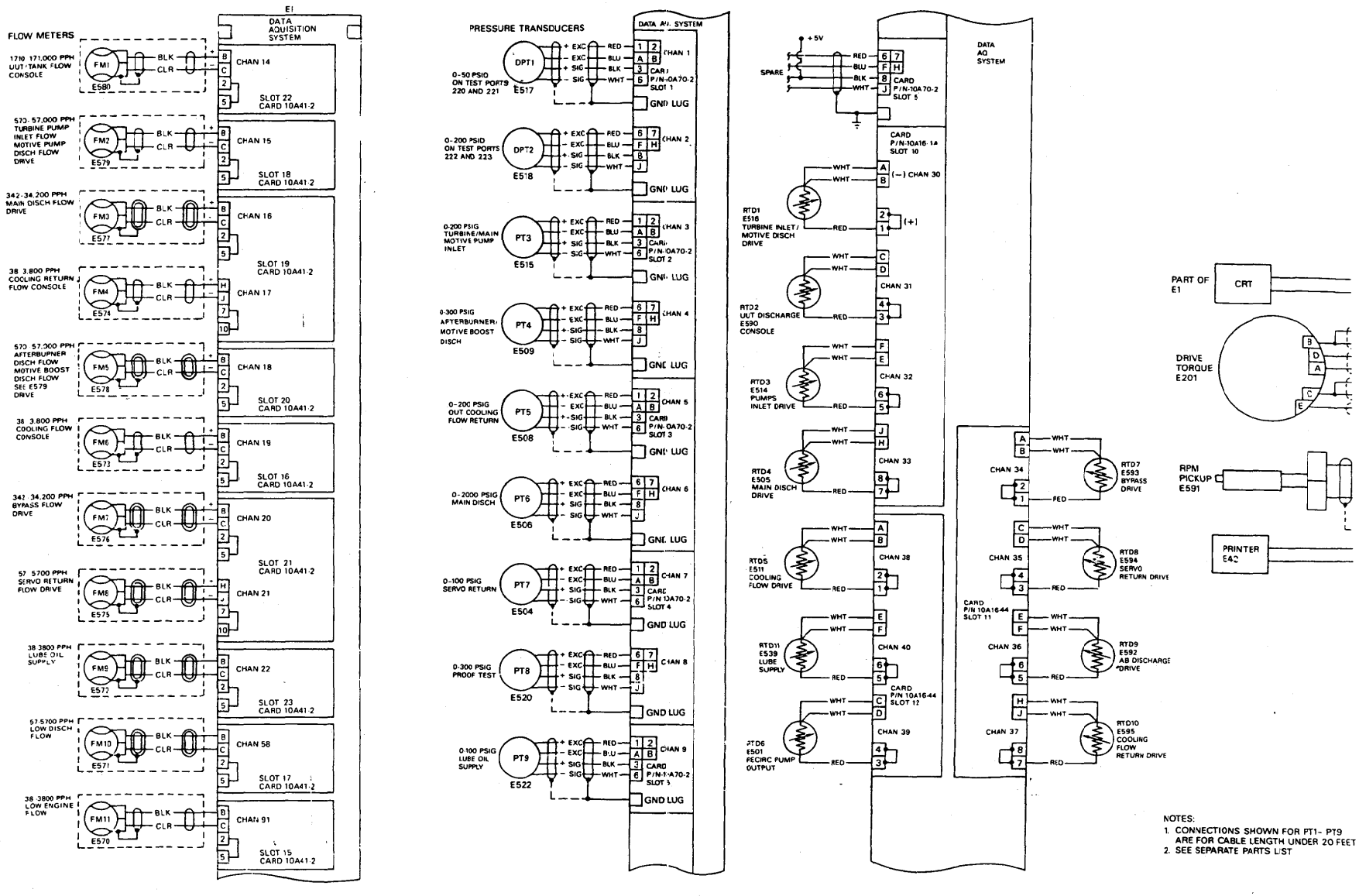
FLOW METERS
E1
DATA AQUISITION SYSTEM
1710 171,000 PPH OUT TANK FLOW CONSOLE
FM1
E580
CHAN 14
SLOT 22 CARD 10A41-2
570-57,000 PPH TURBINE PUMP INLET FLOW MOTIVE PUMP DISCH FLOW DRIVE
FM2
E579
CHAN 15
SLOT 18 CARD 10A41-2
342-34,200 PPH MAIN DISCH FLOW DRIVE
FM3
E577
CHAN 16
SLOT 19 CARD 10A41-2
38 3,800 PPH COOLING RETURN FLOW CONSOLE
FM4
E574
CHAN 17
570-57,000 PPH AFTERBURNER DISCH FLOW MOTIVE BOOST DISCH FLOW SEE E579 DRIVE
FM5
E578
CHAN 18
SLOT 20 CARD 10A41-2
38 3,800 PPH COOLING FLOW CONSOLE
FM6
E573
CHAN 19
SLOT 16 CARD 10A41-2
342 34,200 PPH BYPASS FLOW DRIVE
FM7
E576
CHAN 20
SLOT 21 CARD 10A41-2
57 5700 PPH SERVO RETURN FLOW DRIVE
FM8
E575
CHAN 21
38 3800 PPH LUBE OIL SUPPLY
FM9
E572
CHAN 22
SLOT 23 CARD 10A41-2
57 5700 PPH LOW DISCH FLOW
FM10
E571
CHAN 58
SLOT 17 CARD 10A41-2
38 3800 PPH LOW ENGINE FLOW
FM11
E570
CHAN 91
SLOT 15 CARD 10A41-2
BLK
CLR
PRESSURE TRANSDUCERS
DATA AQ. SYSTEM
0-50 PSID ON TEST PORTS 220 AND 221
DPT1
E517
0-200 PSID ON TEST PORTS 222 AND 223
DPT2
E518
0-200 PSIG TURBINE/MAIN MOTIVE PUMP INLET
PT3
E515
0-300 PSIG AFTERBURNER/ MOTIVE BOOST DISCH
PT4
E509
0-200 PSIG OUT COOLING FLOW RETURN
PT5
E508
0-2000 PSIG MAIN DISCH
PT6
E506
0-100 PSIG SERVO RETURN
PT7
E504
0-300 PSIG PROOF TEST
PT8
E520
0-100 PSIG LUBE OIL SUPPLY
PT9
E522
EXC
SIG
RED
BLU
BLK
WHT
CHAN 1
CHAN 2
CHAN 3
CHAN 4
CHAN 5
CHAN 6
CHAN 7
CHAN 8
CHAN 9
CARD P/N-10A70-2 SLOT 1
CARD P/N-10A70-2 SLOT 2
CARD P/N-10A70-2 SLOT 3
CARD P/N 10A70-2 SLOT 4
CARD P/N-10A70-2 SLOT 5
GND LUG
+5V
SPARE
CARD P/N-10A70-2 SLOT 5
DATA AO SYSTEM
CARD P/N-10A16-14 SLOT 10
RTD1 E516 TURBINE INLET/ MOTIVE DISCH DRIVE
RTD2 OUT DISCHARGE E590 CONSOLE
RTD3 E514 PUMPS INLET DRIVE
RTD4 E505 MAIN DISCH DRIVE
RTD5 E511 COOLING FLOW DRIVE
RTD11 E539 LUBE SUPPLY
RTD6 E501 RECIRC PUMP OUTPUT
CHAN 30
CHAN 31
CHAN 32
CHAN 33
CHAN 38
CHAN 40
CHAN 39
CARD P/N 10A16-44 SLOT 12
CARD P/N 10A16-44 SLOT 11
CHAN 34
CHAN 35
CHAN 36
CHAN 37
RTD7 E593 BYPASS DRIVE
RTD8 E594 SERVO RETURN DRIVE
RTD9 E592 AB DISCHARGE DRIVE
RTD10 E595 COOLING FLOW RETURN DRIVE
PART OF E1
CRT
DRIVE TORQUE E201
RPM PICKUP E591
PRINTER E42
NOTES:
1. CONNECTIONS SHOWN FOR PT1- PT9 ARE FOR CABLE LENGTH UNDER 20 FEET
2. SEE SEPARATE PARTS LIST

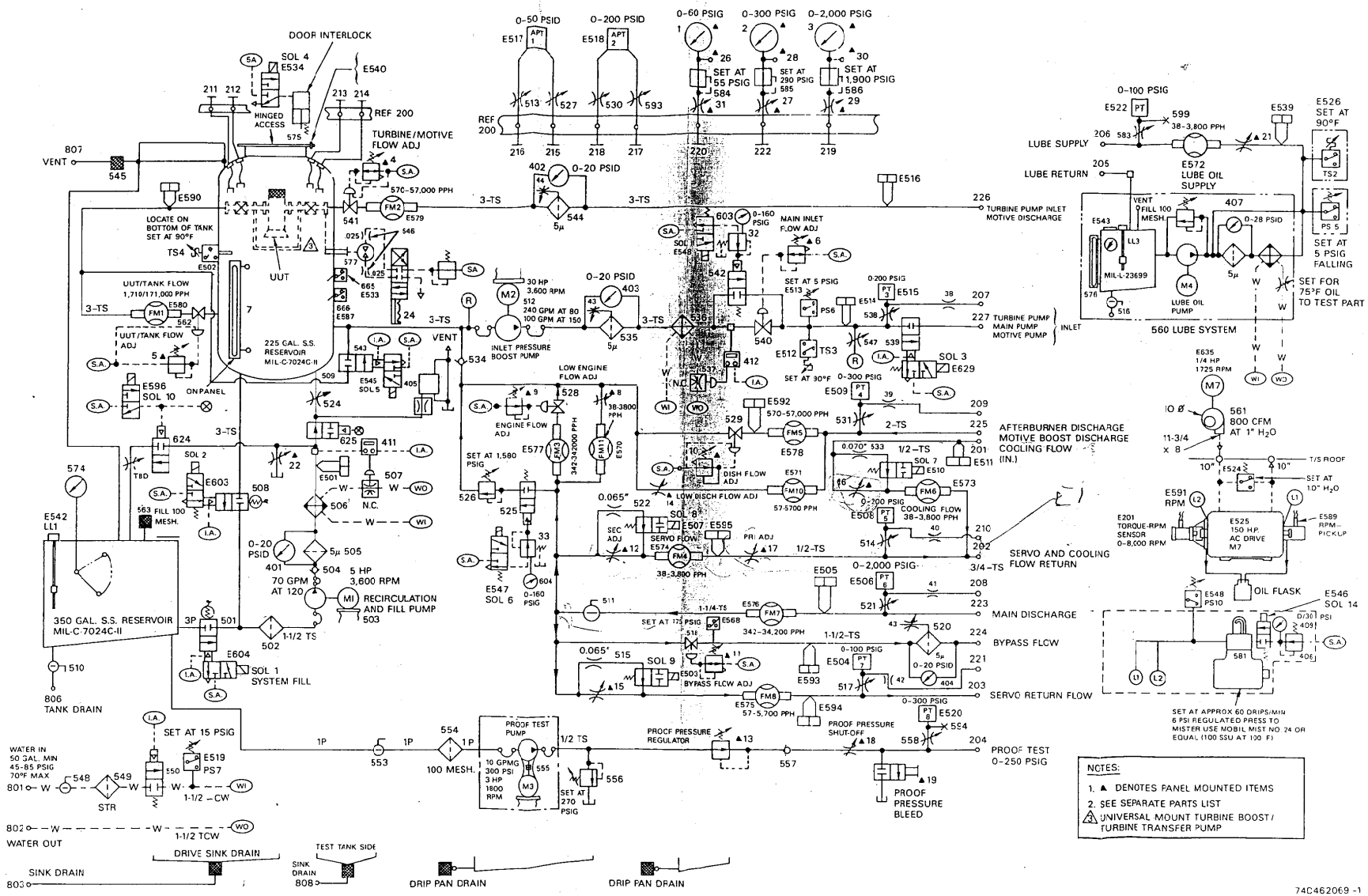

Fuel Pump Test Stand - Hydraulic Schematic (Sheet 1 of 2)